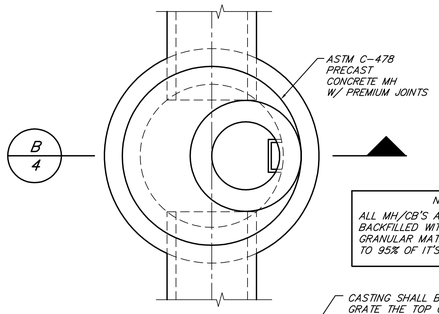


NOTE:
ALL MH/CB'S ARE TO BE BACKFILLED WITH MDOT CLASS II GRANULAR MATERIAL COMPACTED TO 95% OF IT'S MAXIMUM DRY DENSITY.

## PLAN

NOT TO SCALE

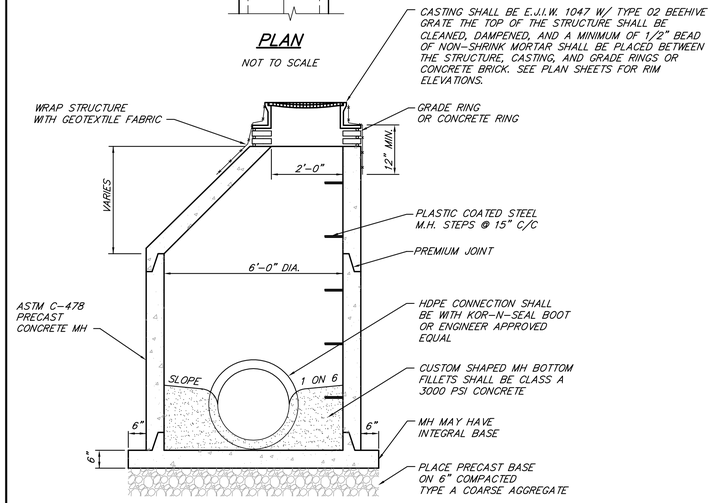


B/4 SECTION
NOT TO SCALE

NOTE: MH/CB SHALL HAVE MIN. 3' SUMP WITH NO FLOW CHANNEL

## 48"-96" DIA. STORM MANHOLE

NOT TO SCALE

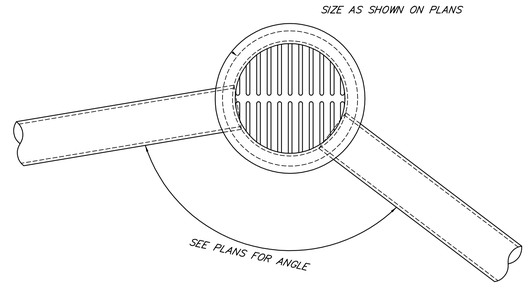


## 30" DIA. H.D.P.E. C.B. PLAN VIEW

NOT TO SCALE

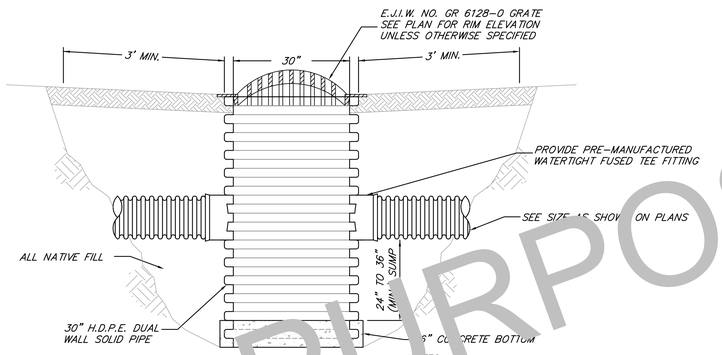


## 30" DIA. H.D.P.E. C.B. TYPICAL SECTION

NOTE:
PROVIDE 6" TYPE A CRUSHED MDOT 6A STONE BEDDING FOR WET SOIL CONDITIONS OR AS DIRECTED BY ENGINEER.

NYLOPLAST STRUCTURES MAY BE SUBSTITUTED FOR 30" DIA. H.D.P.E. CB UPON APPROVAL FROM ENGINEER

PROVIDE COBBLESTONE PROTECTION WHERE INDICATED ON PLAN AND PROFILE DRAWINGS.

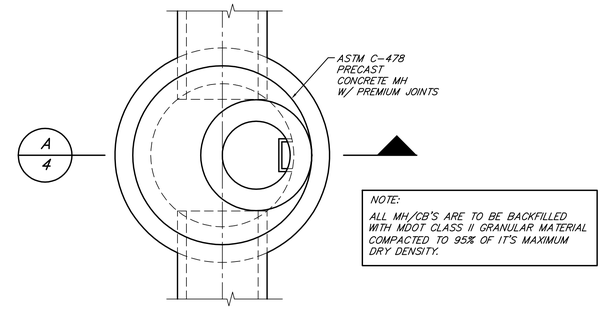


NOTE:
ALL MH/CB'S ARE TO BE BACKFILLED WITH MDOT CLASS II GRANULAR MATERIAL COMPACTED TO 95% OF IT'S MAXIMUM DRY DENSITY.

## PLAN

NOT TO SCALE

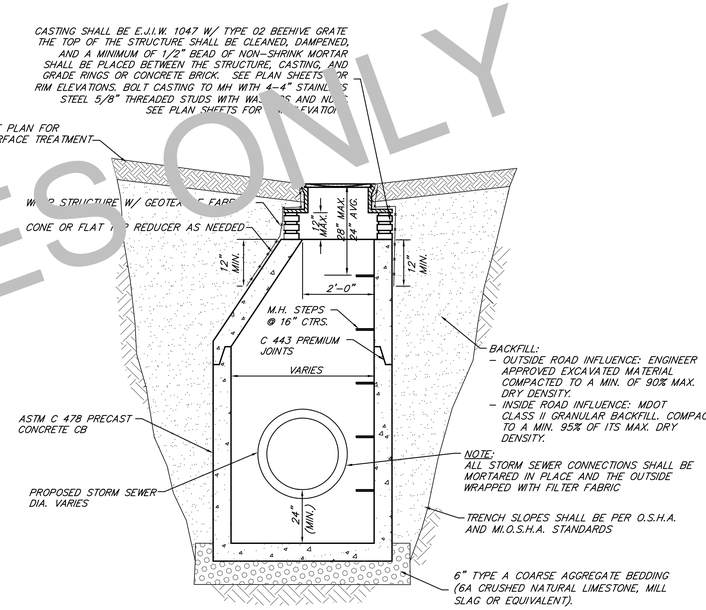


## 48"-60" DIA. CATCH BASIN / MANHOLE DETAIL

NOT TO SCALE

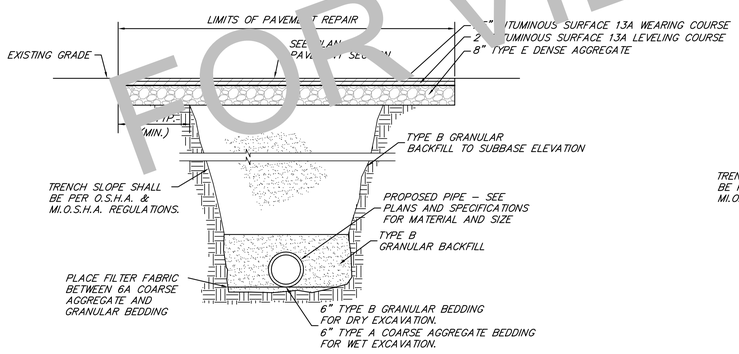


## R.C.P. \H.D.P.E. TRENCH DETAIL A - WITHIN INFLUENCE OF ROAD OR IMPROVED SURFACE

NOT TO SCALE

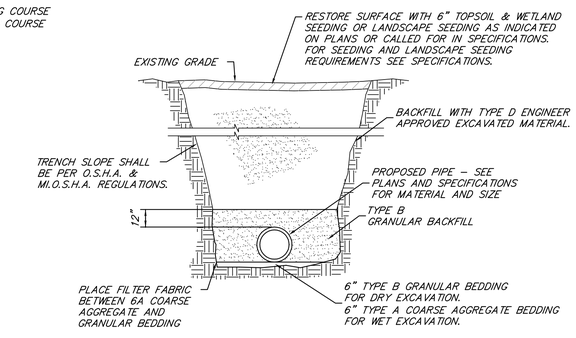


## R.C.P. \H.D.P.E. TRENCH DETAIL B - OUTSIDE INFLUENCE OF ROAD OR IMPROVED SURFACE

NOT TO SCALE

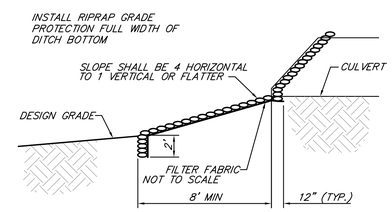


## GRADE PROTECTION DETAIL AT CULVERTS

NOT TO SCALE

TRENCH DETAIL NOTES:

FOR GRAVEL DRIVES PROVIDE 6" TYPE G COURSE AGGREGATE SURFACE.

COMPACT ALL BEDDING AND BACKFILL TO A MINIMUM OF 95% OF THE MATERIAL MAXIMUM DRY DENSITY AS DETERMINED BY MODIFIED PROCTOR.

| | | | |
|---|---|---|---|
| TAM | | BID SET | 01/27/10 |
| BY | MARK | REVISIONS | DATE |

THE WORK REPRESENTED BY THIS DRAWING WAS DESIGNED BY THE ENGINEER FOR THIS SPECIFIC APPLICATION AND SPECIFIC LOCATION DESCRIBED HEREON IN ACCORDANCE WITH THE CONDITIONS PREVALENT AT THE TIME THE DESIGN WAS DONE. THE ENGINEER DOES NOT GUARANTEE AND WILL NOT BE LIABLE FOR ANY OTHER LOCATION, CONDITION, DESIGN OR PURPOSE.

FRED DOW DRAIN
HYDE PARK BRANCH
MUSKEGON CO., MICHIGAN

# STANDARD DETAILS

OFFICE LOCATIONS
SAGINAW, MI
ST. JOHNS, MI
CARO, MI
BELLEVILLE, MI

Spicer group ©2009

ST. JOHNS OFFICE
1400 Zeeb Drive
St. Johns, MI 48879
Tel. 989-224-2355
Fax. 989-224-2357
www.SpicerGroup.com

DE. BY: POC CH. BY: PLF
DR. BY: POC APP. BY: LJP
PROJECT NO. 1179445G2009

STDS.
SHEET 4 OF 4
DATE SEPTEMBER, 2009
SCALE AS SHOWN
FILE NO. JDR-1875-04

FOR VIEWING PURPOSES ONLY

P:\proj2009\1179445G2009_FredDowDrain\dwg\JDR-1875-04.dwg, 1/25/2010 2:46:00 PM, mccormackta